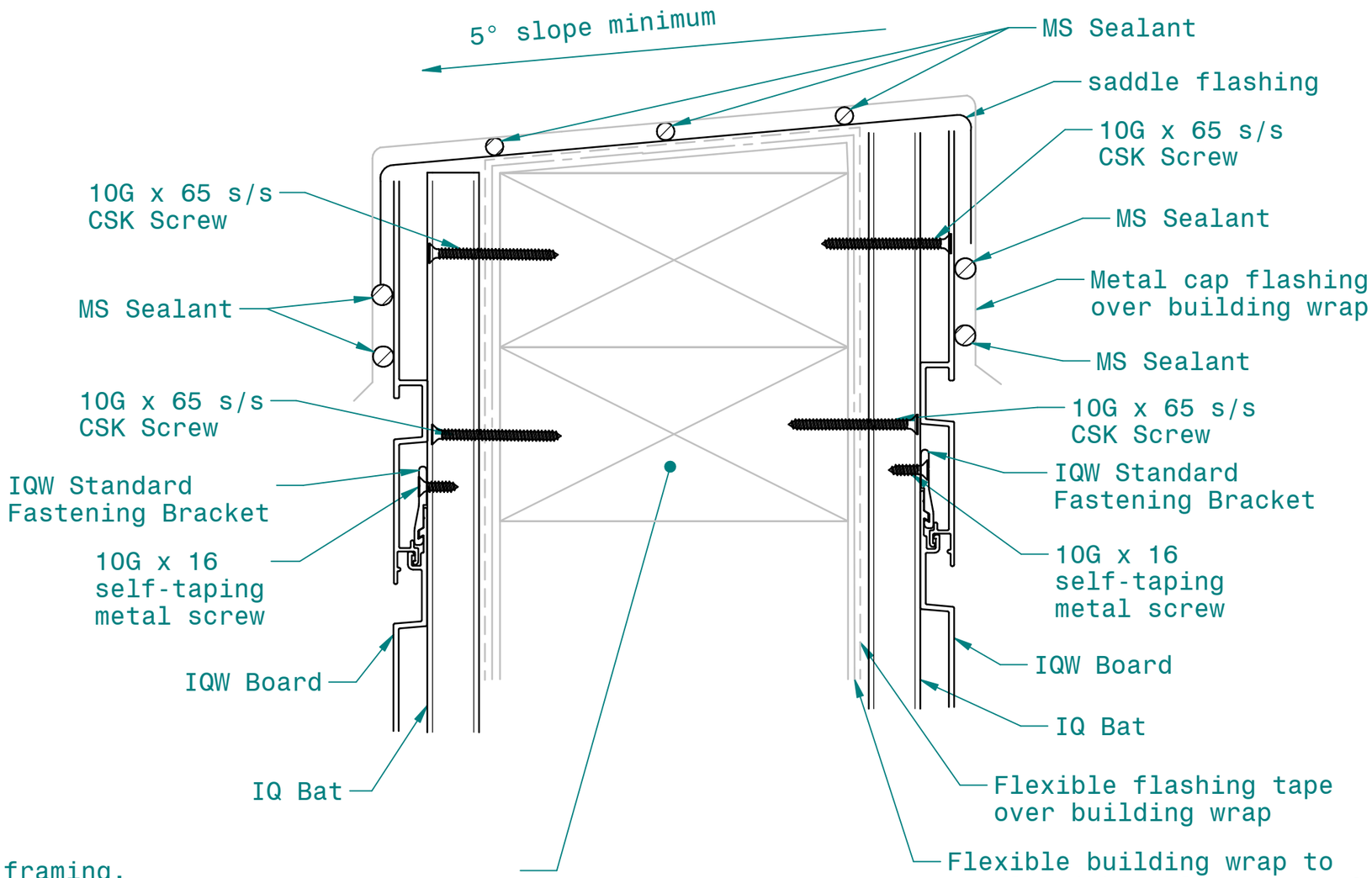

Timber framing.
To comply with the NZBC or have the
I equivalent stiffness to NZS 3604:2011.
Studs @ max 600 mm crs, nogs &
dwangs @ max 800 mm crs.

iQCLAD ALUMINIUM CLADDING

www.iqclad.nz

scale: 1:2	date: 19.02.2023
title: Parapet flashing	
drawing number: IQW EC 37	

A3